SIPHONS ABLÄUFE

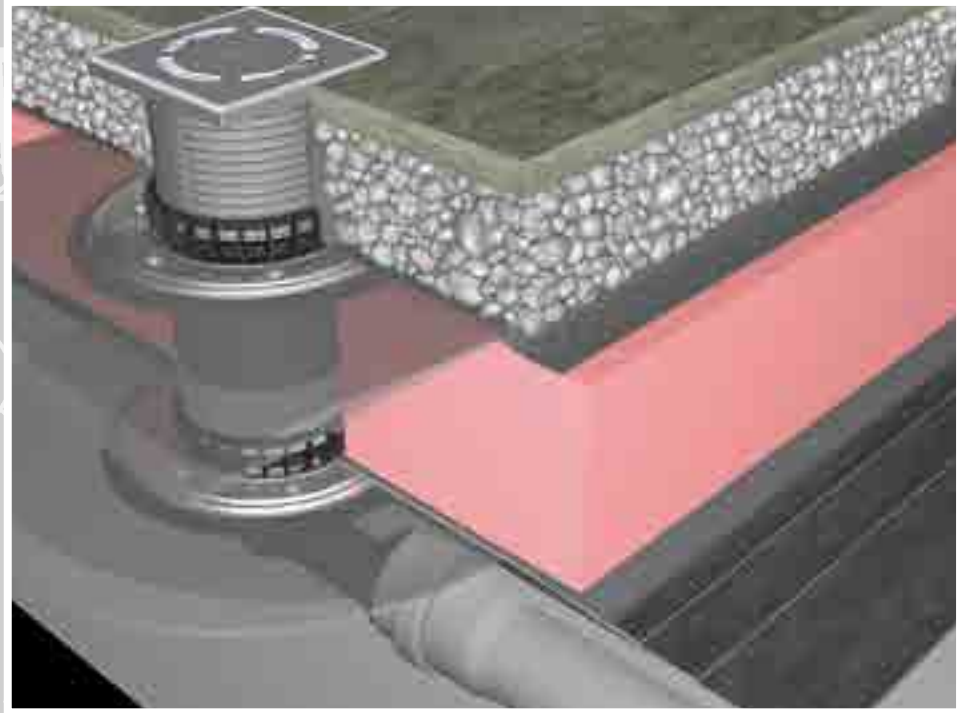

HL Drains

12. Balcony and terrace

12

HL Balcony and terrace drains

Basic information about design and installation

In general the draining of rain water on terrace and balcony surfaces should happen with gullies. Allready during planing some important topics should be taken into consideration:

▲ To choose the right drain including all accessories a detailed plan of the floor construction (ceiling material, thermal insulation, waterproofing…) has to be defined. Especially with inverted roof constructions different drain positions both above the thermal insulation and on the waterproofing has to be provided.

▲ The area (or subarea) and the rainfall rate has to be known, when choosing the fitting gully. Therefore important is the calculated rainwater rate (l/s) and the capacity of the gully (l/s).

▲ To avoid leakage in the structure, it is important, to take care of the kind of waterproofing, especially the connection between drain and the local waterproofing. Please check the compatibility between the local waterproofing on the terrace and our HL prefabricated sealing kits.

▲ Please notice, that acc. international standards at terraces and loggias, which are surrounded by attic walls, one should care for a suitable emergency drainage. The sence of it is, to avoid overload on the terrace construction by backwater, caused by a blocked drain or by heavy rain events. Therefore we recommend to clean gullies frequently.

▲ According to ÖNORM roof drains should only be connected to rain water sewage. Should this not be possible, we recommend, to use gullies with integrated frost-proof flap.

▲ Maintenance
In accordance with DIN 1986-3, roof drains, balcony and terrace drains, as well as emergency drains should be inspected and, if necessary, serviced at least every 6 months. Especially in the autumn months or after extreme weather events, the maintenance should be carried out at shorter intervals. Care should be taken to remove leaves and dirt from the inlet grates or leaf catchers to ensure that rainwater can flow in and out unhindered. Missing and defective parts shall be replaced as part of this work. The HL635N drainage and inspection chamber facilitates this necessary work, especially on green roofs, and at the same time ensures safe drainage with its generous drainage openings

Relevant standards/directives

ÖNORM B2501 ..... Drainage of buildings
DIN 1986-100 ..... Drainage systems for buildings and estates
ÖNORM EN 12056..... Gravity drainage systems inside of buildings
EN 1253.....Drains for buildings
ÖNORM B2209 ..... Waterproofing works
ÖNORM B2220 ..... Roof waterproofings with bitumen and plastic sheetings
ÖNORM B7209 ..... Waterproofings for buildings
ÖNORM B7220 ..... Roofs with waterproofings

Selection of the convenient drain

Selective criteria	Requirements	Product
Drainage surface	When you calculate the quantity of occuring rain water acc. ÖNORM B2501 and DIN 1986-100, you have to use at least the standard rain yield factor of 300 l/ (s x ha). Quantity of rain water = 0,03 l/s x Drainage surface (m^2) Quantity of gullies = $\frac{\text{Absolute quantity of rain water}}{\text{Capacity of the gully}}$	For the exact definition of the right drain and the quantity of gullies, please mind the capacity of the particular article.
Ceiling construction	To find out, what is the best composition of the drain, like extension (with our without flange), gravel guard, sealing kit or heating, a detailed plan of the different layers of the ceiling is neccessary.	Extension (with or without flange) Sealing kit Gravel guard eventually heating
Waterproofing	To have a save and leak-proof connection between drain and local waterproofing, the waterproofing material on the ceiling should be known.	
	Local waterproofing (2 mm thick, flexible)	HL83.0, HL8300.0
	Bitumen coating	HL83 (with EPDM-foil)
	Bitumen waterproofing, liquid bitumen compound	HL83.H, HL8300H (with bitumen flange) **Drain HL80H, HL3100TH, HL5100TH** Extensions HL85NH, HL8500H
	PVC waterproofing	HL83.P, HL8300.P
	FPO waterproofing, based on PP	HL83.PP, HL8300.PP (with PP flange)
	Liquid sealing compounds	HL83.M, HL8300.M (with textile coated membrane)
Direction of the outlet	horizontal	HL80-series, HL90, HL90.2, HL5100T-series
	vertical	HL80-series, HL310N.2, HL3100T-series
Sewer	Rain water sewer Mixed sewer	All types of drains applicable Gullies with frost-proof flap: HL310N.2, HL3100T-series, HL5100T-series
Additional information	Acc. DIN 1986-100 it has to be checked at all roof constructions, if emergency overflows are neccessary, considering the expected incidents of rain at the construction site, the construction itself, the hydro-insulation, the statics of the roof and the special character of the drainage system.	

HL Balcony and terrace drains – Sectional drawings

Terrace, slabs in gravel laid, without thermal insulation

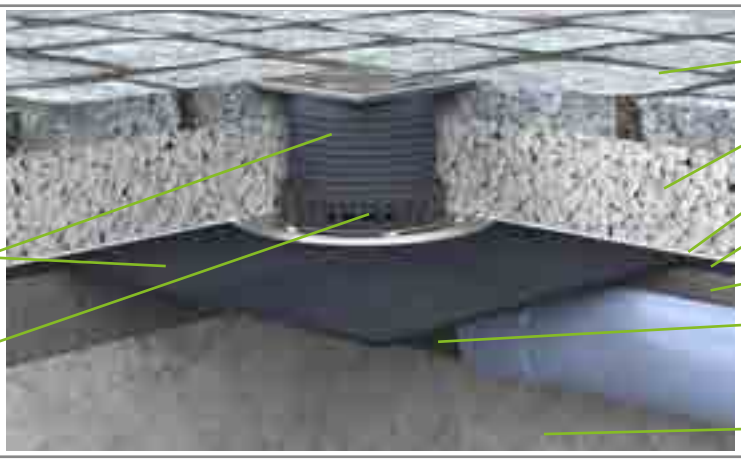

Terrace, slabs laid in gravel, thermal insulation, Inverted construction

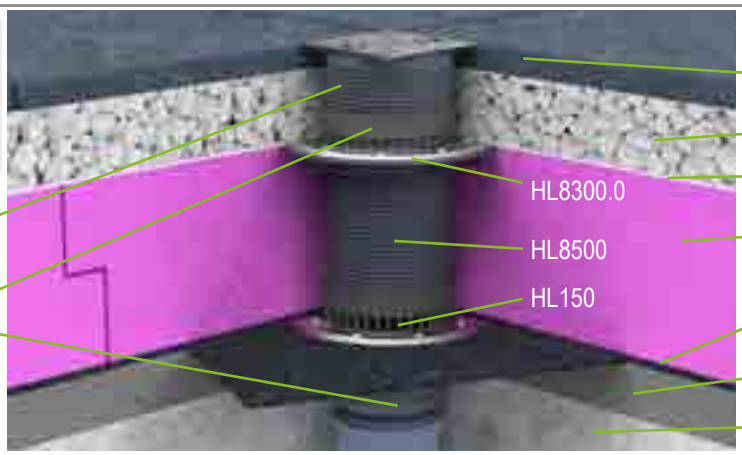

Terrace, floor laid on spacer with vapor barrier and thermal insulation

Terrace tiled with integration into the composite waterproofing

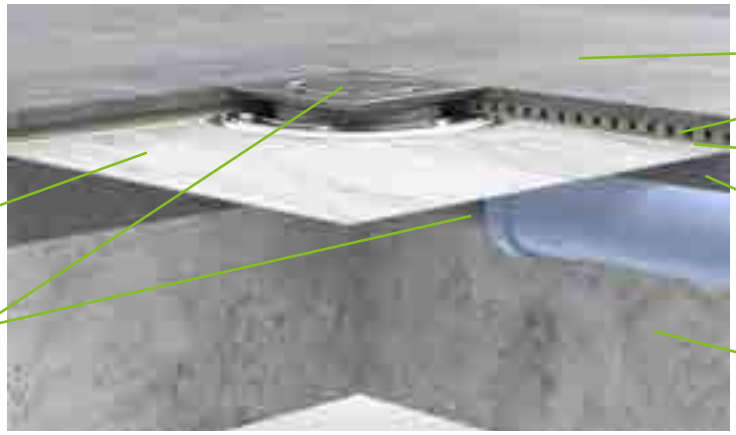

HL Balcony and terrace drains – Installation

Terrace, slab fit into gravel bed, thermal insulation, inverted construction

1. Set gully including lot cover into the tap hole

2. Weld the prefabricated bitumene flange with the local bitumene waterproofing

3. Set the fleece, put on the gravel guard (HL180), apply the thermal insulation

4. Shorten extension with flange (HL85N) and adjust to the height of the thermal insulation, set on the gravel guard (HL180), set the lot cover

5. Clamp fleeze between the stainless steel clamp ring (HL83.0) and the extension (HL85N), set the gravel guard (HL180), adjust the extension to the final slab height

6. Coat the gravel guard and the extension with fleece, fill in gravel embankment and lay the slabs, insert grate

HL Balcony and terrace drains – Products – Overview

Drains

Product	HL80	HL80H	HL5100T	HL5100TH
Description	Standard drain	Standard drain with bitumen flange	Drain horizontal with high capacity	Drain horizontal with high capacity and bitumen flange
Function	Usage horizontal and vertical	Usage horizontal and vertical, especially for bitumen waterproofing	For surfaces up to 51 m²	For surfaces up to 51 m², for bitumen waterproofings

Extensions

Product	HL340N	HL3400	HL3400	HL85N	HL85N	HL8500
Description	Standard extension	Extension		Extension with flange		Extension with flange
Function	To elongate the extension	To elongate the extension, fits to drain series HL3100 and 5100		Adjustment of the drain to the waterproofing level		Adjustment of the drain to the water-proofing level. Fits to series HL3100 and HL5100

Sealing kits

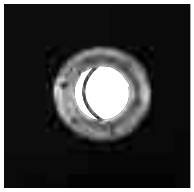

Product	HL83	HL8300	HL83.0	HL8300.0	HL83.M	HL8300.M
Description	Sealing kit with EPDM-foil	Sealing kit with EPDM-foil	Sealing kit without foil	Sealing kit without foil	Sealing kit with textile coated membrane	Sealing kit with textile coated membrane
Function	For bitumen coatings	For bitumen coatings, fits to drain series HL3100 and 5100	Clamping of local waterproofings	For clamping of local waterproofings, fits to drain series HL3100 and HL5100	For liquid sealing compounds	For liquid sealing com-pounds, fits to drains HL3100-series and HL5100-series

Accessories

Product	HL180	HL150	HL080.8E	HL157	HL82
Description	Gravel guard	Drainage element	Leaf catcher	Leaf catcher	Heating kit
Function	For the drainage of rain water on the waterproofing level, e.g. inverted construction	For the drainage of rain water on the waterproofing level, e.g. inverted roofs. For drains HL3100T-series and HL5100T-series.	For not walkable surfaces like gravel embankment, green surfaces	For not walkable surfaces like gravel embankment, green surfaces, fits to the drain series HL3100T and HL5100T	To heat the gully and to avoid ice

HL Balcony and terrace drains – Products – Overview

HL90.2	HL310N.2	HL3100T	HL3100TH
Drain horizontal	Drain vertical	Drain vertical, high capacity	Drain vertical, high capacity and bitumen flange
Extremly flat, for flat floor constructions	At tap holes, high capacity	For surfaces up to 55 m²	For surfaces up to 55 m², especially for bitumen waterproofings

Product data see chapter Sealing kits/Extensions

HL85NH	HL85NH	HL85NC	HL8500H
Extension with bitumen flange	Extension with bitumen flange	Extension with polymere concrete flange	
Adjustment of the drain to the bitumen waterproofing	Adjustment of the drain to the bitumen waterproofing level. Fits to series HL3100 and HL5100	Adjustment of the drain to the liquid sealing compound	

Product data see chapter Sealing kits/Extensions

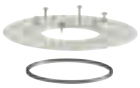

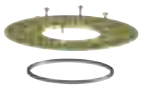

HL83.H	HL8300.H	HL83.P	HL8300.P	HL83.PP	HL8300.PP
Sealing kit with bitumen flange	Sealing kit with bitumen flange	Sealing kit with PVC-flange	Sealing kit with PVC-flange	Sealing kit with PP-flange	Sealing kit with PP-flange
For bitumen waterpr. and liquid bitumen compounds	For bitumen waterproofings and liquid bitumen compounds. Fits to drains HL3100-series and HL5100-series	For PVC-waterproofings	For PVC-waterproofings. For drains HL3100-series and HL5100-series	For FPO-waterpr., based on PP	For FPO waterproofings, based on PP. For drains HL3100-series and HL5100-series

HL181	HL151	HL152	HL153	HL155	HL156
Gravel trap	Gravel guard	Thermal insulation - horizontal	Thermal insulation - vertical	Thermal insulation kit incl. heating, horizontal	Thermal insulation kit incl. heating, vertical
For slaps, fit into gravel embankment	Below slaps or wooden panels. For drains HL3100T-series and HL5100T-series	For upgrading HL5100T to an insulated version	For upgrading HL3100T to an insulated version	Upgrade kit, thermal insulated and with 18W/230V heating for HL5100T(H)	Upgrade kit, thermal insulated and with 18W/230V heating for HL3100T(H)

HL Balcony and terrace drains - Products - Data

HL80 Balcony and terrace drain with convertable outlet

Data

Material	PP, PE
Outlet	DN50/75 cuttable, convertable from horizontal to vertical, Material PE, pluggable and weldable
Extension	123 x 123 mm, cuttable
Inlet	Stainless steel grate 115 x 115 mm
Stench trap	Frost-proof flap
Standard	EN 1253
Load classification	K3 – max. 300 kg
Additional information	For surfaces up to 25 m² Recess dimensions: 185 x 340 mm, Tap hole diameter: 185mm
Including	Supporting frame, lot cover

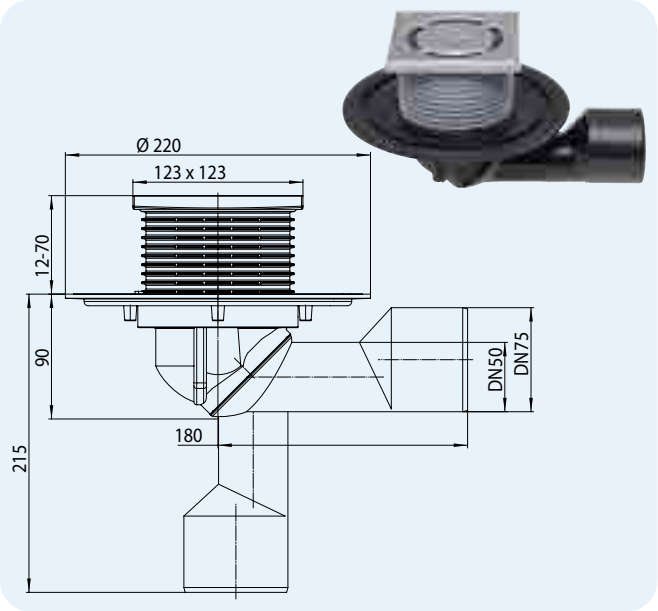

HL-No.	Dimension	Weight	EAN	Piece/package
80	DN50/75	650 g	+700806	1

HL80H Balcony and terrace drain with bitumen flange

Data

Material	PP, PE, pre-welded **bitumen membrane**
Outlet	DN50/75 cuttable, convertable from horizontal to vertical, Material PE, pluggable and weldable
Extension	123 x 123 mm, cuttable
Stench trap	Frost-proof flap
Inlet	Stainless steel grate 115 x 115 mm
Standard	EN 1253
Load classification	K3 – max. 300 kg
Recommended for	Bitumen waterproofings
Additional information	For surfaces up to 25 m² Recess dimensions: 185 x 340 mm, Tap hole diameter: 185mm
Including	Supporting frame, Lid cover

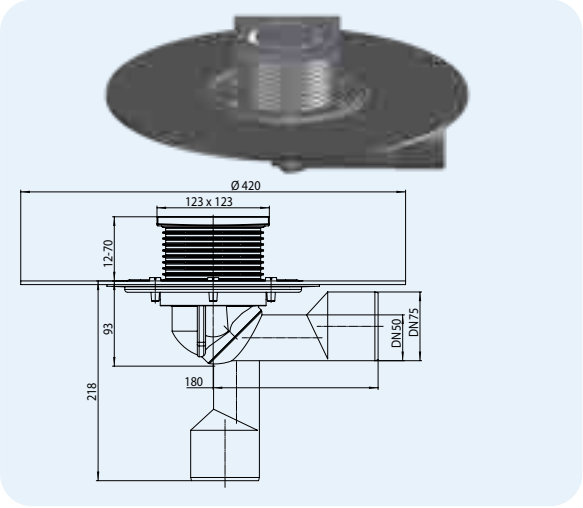

HL-No.	Dimension	Weight	EAN	Piece/package
80H	DN50/75	1300 g	+701803	1

Drainage table HL80, HL80H
Tested according to EN 1253-2:2015 according to pt. 5.5.2.1 Fig. 10a) + 10b) and pt. 5.5.1.2 Fig. 9
Drainage capacity tested according to EN 1253-2:2015 according to pt. 5.5.2.1 on downpipe 3 m

Nominal width	EN 1253	5 mm	15 mm	25 mm	35 mm	45 mm	55 mm	65 mm	75 mm
DN 50	min. 0,9 (35 mm)	0,30	0,90	0,95	1,05	1,10	1,20	1,25	1,30
DN 75	min. 1,7 (35 mm)	0,35	1,00	1,10	1,30	1,35	1,40	1,45	1,50

Drainage capacity measured according to EN 1253-2:2015 according to clause 5.5.1.2 free draining

Nominal width	EN 1253	5 mm	15 mm	20 mm	35 mm	45 mm	55 mm	65 mm	75 mm
DN 50	min. 0,8 (20 mm)	0,30	0,90	1,00	1,20	1,25	1,30	1,35	1,40
DN 75	min. 0,8 (20 mm)	0,30	0,90	0,95	1,10	1,20	1,30	1,35	1,40

HL81G Balcony and terrace drain with convertable outlet, cast iron frame and grate

Data

Material	PP, PE, cast iron/PP
Outlet	DN50/75 cuttable, convertable from horizontal to vertical, Material PE, pluggable and weldable
Frame	**Cast iron** 150 x 150 mm
Extension	Plastic, cuttable
Inlet	**Cast iron grate** 137 x 137 mm
Stench trap	Frost-proof flap
Standard	EN 1253
Load classification	A – max. 1,5 t
Recommended for	Loads up to 1,5 t
Additional information	For surfaces up to 25 m² Recess dimensions: 185 x 340 mm, Tap hole diameter: 185mm
Including	Lid cover

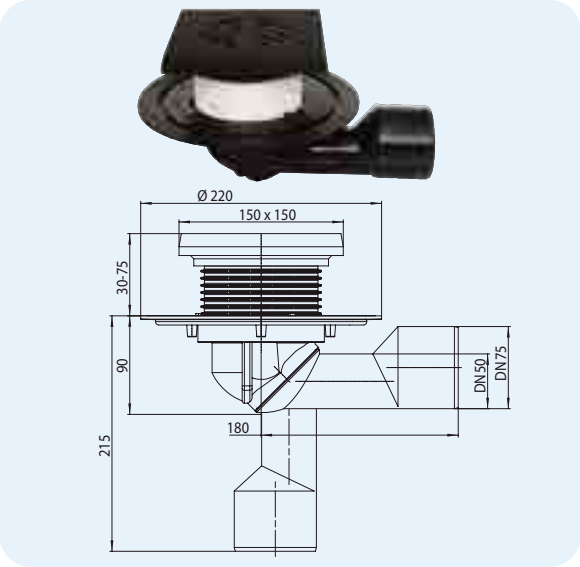

HL-No.	Dimension	Weight	EAN	Piece/package
81G	50/75	2620 g	+000876	1
81GH	50/75	3114 g	+600337	1

Drainage table HL81G, HL81GH
Tested according to EN 1253-2:2015 according to pt. 5.5.2.1 Fig. 10a) + 10b) and pt. 5.5.1.2 Fig. 9
Drainage capacity tested according to EN 1253-2:2015 according to pt. 5.5.2.1 on downpipe 3 m

Nominal width	EN 1253	5 mm	15 mm	25 mm	35 mm	45 mm	55 mm	65 mm	75 mm
DN 50	min. 0,9 (35 mm)	0,30	0,95	1,00	1,10	1,25	1,30	1,35	1,40
DN 75	min. 1,7 (35 mm)	0,30	0,95	1,30	1,35	1,40	1,45	1,55	1,60

Drainage capacity measured according to EN 1253-2:2015 according to clause 5.5.1.2 free draining

Nominal width	EN 1253	5 mm	15 mm	20 mm	35 mm	45 mm	55 mm	65 mm	75 mm
DN 50	min. 0,8 (20 mm)	0,35	1,05	1,25	1,35	1,40	1,45	1,50	1,55
DN 75	min. 0,8 (20 mm)	0,35	1,05	1,15	1,25	1,30	1,35	1,40	1,45

HL90 Balcony and terrace drain, extra-flat, installation height 57 mm

Data

Material	PP
Outlet	DN40/50 cuttable, horizontal, pluggable
Extension	123 x 123 mm, cuttable
Inlet	Stainless steel grate 115 x 115 mm
Standard	EN 1253
Load classification	K3 – max. 300 kg
Additional information	**Installation height 57 mm;** For surfaces up to 18 m², Recess dimensions: 185 x 340 mm, frost-proof
Including	Supporting frame, Lot cover, Sand trap

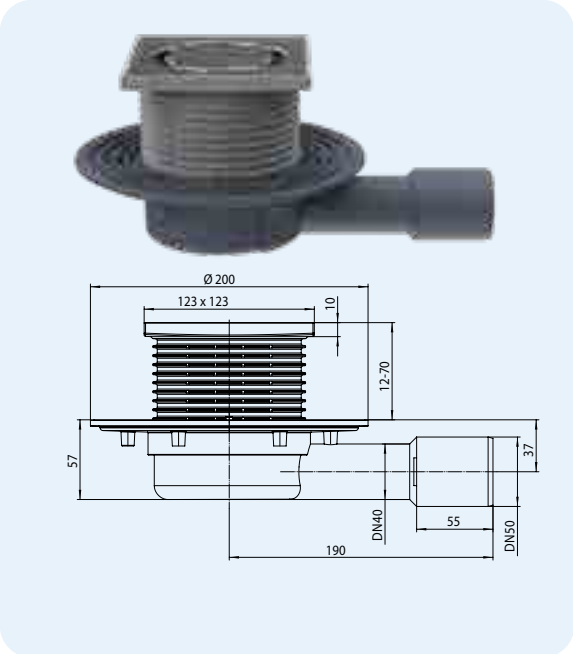

HL-No.	Dimension	Weight	EAN	Piece/package
90	DN40/50	425 g	+006359	1

Drainage table HL90
Tested according to EN 1253-2:2015 according to pt. 5.5.2.1 Fig. 10a) + 10b) and pt. 5.5.1.2 Fig. 9
Drainage capacity tested according to EN 1253-2:2015 according to pt. 5.5.2.1 on downpipe 3 m

Nominal width	EN 1253	5 mm	15 mm	25 mm	35 mm	45 mm	55 mm	65 mm	75 mm
DN 40	-	-	-	-	-	-	-	-	-
DN 50	min. 0,9 (35 mm)	0,30	0,80	0,85	0,90	0,95	1,00	1,05	1,10

Ablaufleistung gemessen nach EN 1253-2:2015 nach Pkt. 5.5.1.2 frei auslaufend

Nominal width	EN 1253	5 mm	15 mm	20 mm	35 mm	45 mm	55 mm	65 mm	75 mm
DN 40	min. 0,6 (20 mm)	0,30	0,65	0,75	0,80	0,85	0,90	0,95	1,00
DN 50	min. 0,8 (20 mm)	0,30	0,70	0,75	0,90	0,95	1,00	1,10	1,15

HL90.2 Balcony and terrace drain like HL90, but with frost-proof stench trap

Data

Material	PP
Outlet	DN40/50 cuttable, horizontal, pluggable
Extension	123 x 123 mm, cuttable
Inlet	Stainless steel grate 115 x 115 mm
Stench trap	**Frost-proof flap**
Standard	EN 1253
Load classification	K3 – max. 300 kg
Additional information	**Installation height 57 mm;** For surfaces up to 18 m², Recess dimensions: 185 x 340 mm, frost-proof
Including	Supporting frame, Lot cover

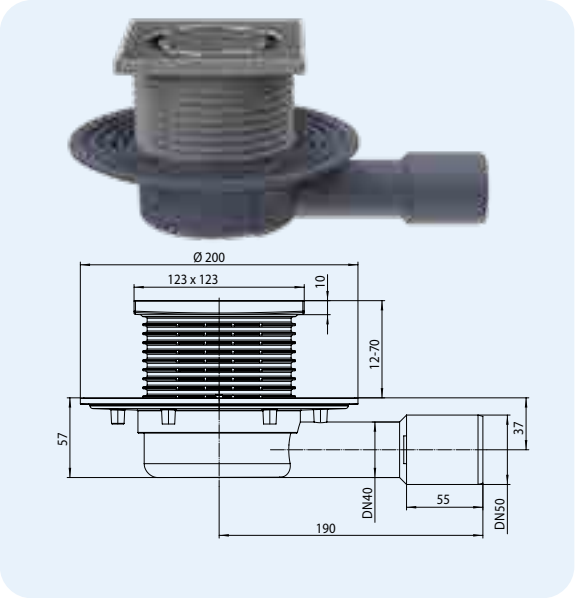

Drainage table HL90.2
Tested according to EN 1253-2:2015 according to pt. 5.5.2.1 Fig. 10a) + 10b) and pt. 5.5.1.2 Fig. 9
Drainage capacity tested according to EN 1253-2:2015 according to pt. 5.5.2.1 on downpipe 3 m

Nominal width	EN 1253	5 mm	15 mm	25 mm	35 mm	45 mm	55 mm	65 mm	75 mm
DN 40	-	-	-	-	-	-	-	-	-
DN 50	min. 0,9 (35 mm)	0,35	0,75	0,8	0,85	0,9	0,95	1,00	1,05

Drainage capacity measured according to EN 1253-2:2015 according to clause 5.5.1.2 free draining

Nominal width	EN 1253	5 mm	15 mm	20 mm	35 mm	45 mm	55 mm	65 mm	75 mm
DN 40	min. 0,6 (20 mm)	0,35	0,70	0,75	0,80	0,85	0,90	0,95	1,00
DN 50	min. 0,8 (20 mm)	0,40	0,75	0,80	0,90	0,95	1,00	1,05	1,10

HL-No.	Dimension	Weight	EAN	Piece/package
90.2	DN40/50	425 g	+016853	1

HL90KH Drain body with bitumen flange, installation height 61 mm

Data

Material	PP, pre-welded bitumen flange
Outlet	DN40/50 cuttable, horizontal, pluggable
Cover	Flat leaf catcher HL181
Standard	EN 1253
Additional information	**Installation height 61 mm;** for surfaces up to 17 m² (calculated with 400 lit of rainfall (s x ha), frost resistant, recess dimensions: 185 x 340 mm

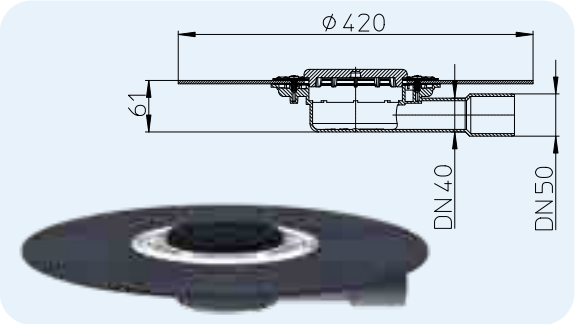

HL-No.	Dimension	Weight	EAN	Piece/package
90KH	DN40/50	1100 g	+036998	1

Drainage table HL90KH
Tested according to EN 1253-2:2015 according to pt. 5.5.2.1 Fig. 10a) + 10b) and pt. 5.5.1.2 Fig. 9
Drainage capacity tested according to EN 1253-2:2015 according to pt. 5.5.2.1 on downpipe 3 m

Nominal width	EN 1253	5 mm	15 mm	25 mm	35 mm	45 mm	55 mm	65 mm	75 mm
DN 40	-	-	-	-	-	-	-	-	-
DN 50	min. 0,9 (35 mm)	0,35	0,85	0,9	0,95	1	1,1	1,15	1,2

Drainage capacity measured according to EN 1253-2:2015 according to clause 5.5.1.2 free draining

Nominal width	EN 1253	5 mm	15 mm	20 mm	35 mm	45 mm	55 mm	65 mm	75 mm
DN 40	min. 0,6 (20 mm)	0,50	0,65	0,70	0,80	0,85	0,90	0,95	1,00
DN 50	min. 0,8 (20 mm)	0,30	0,65	0,70	0,80	0,85	0,90	0,95	1,00

HL310N.2 Balcony and terrace drain with frost-proof flap, DN50/75/110

Data

Material	PP
Outlet	DN40/50 cuttable, vertical, pluggable
Extension	123 x 123 mm, cuttable
Inlet	Stainless steel grate 115 x 115 mm
Stench trap	**Frost-proof flap**
Standard	EN 1253
Load classification	K3 – max. 300 kg
Additional information	For surfaces up to 21 m², Recess dimensions: min. 185 x 185 mm, Tap hole diameter: 180 mm, frost-proof
Including	Supporting frame, Lot cover

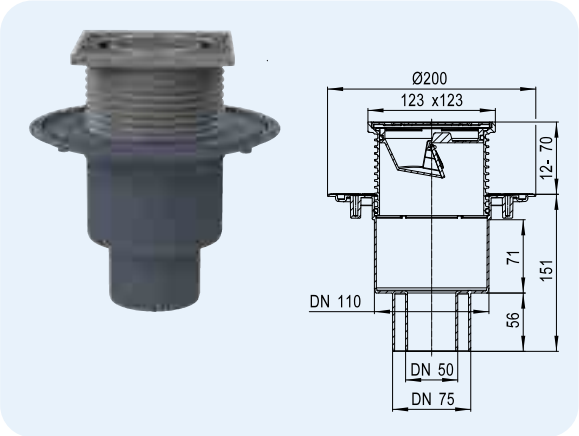

HL-No.	Dimension	Weight	EAN	Piece/package
310N.2	DN50/75/110	565 g	+021963	1

Drainage table HL310N.2
Tested according to EN 1253-2:2015 according to pt. 5.5.2.1 Fig. 10a) + 10b) and pt. 5.5.1.2 Fig. 9

Drainage capacity tested according to EN 1253-2:2015 according to pt. 5.5.2.1 on downpipe 3 m

Nominal width	EN 1253	5 mm	15 mm	25 mm	35 mm	45 mm	55 mm	65 mm	75 mm
DN 50	min. 0,9 (35 mm)	0,30	0,85	1,15	1,20	1,20	1,25	-	-
DN 75	min. 1,7 (35 mm)	0,30	0,80	0,90	0,95	1,00	1,05	1,1	-
DN 110	min. 4,5 (35 mm)	0,35	0,8	0,85	0,90	0,95	1,00	1,05	-

Drainage capacity measured according to EN 1253-2:2015 according to clause 5.5.1.2 free draining

Nominal width	EN 1253	5 mm	15 mm	20 mm	35 mm	45 mm	55 mm	65 mm	75 mm
DN 50	min. 0,8 (20 mm)	0,25	0,80	0,85	0,90	0,95	1,00	1,05	-
DN 75	min. 0,8 (20 mm)	0,25	0,80	0,85	0,90	0,95	1,00	1,05	-
DN 110	min. 1,4 (20 mm)	0,25	0,80	0,85	0,90	0,95	1,00	1,05	-

HL310KH Drain body with bitumen flange

Data

Material	PP, pre-welded bitumen flange
Outlet	DN40/50 cuttable, vertical, pluggable
Cover	Flat leaf catcher HL181
Standard	EN 1253
Additional information	for surfaces up to 32 m² (calculated with 400 lit of rainfall (s x ha), frost resistant, recess dimensions: 185 x 185 mm Core drilling 185mm

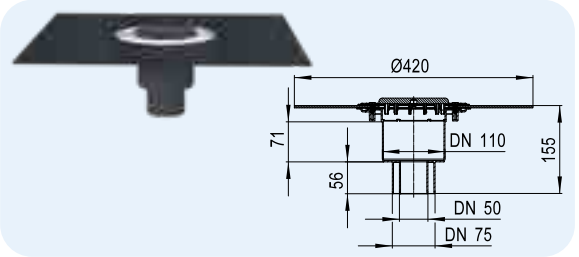

HL-No.	Dimension	Weight	EAN	Piece/package
310KH	DN50/75/110	1050 g	+037018	1

Drainage table HL310KH
Tested according to EN 1253-2:2015 according to pt. 5.5.2.1 Fig. 10a) + 10b) and pt. 5.5.1.2 Fig. 9

Drainage capacity tested according to EN 1253-2:2015 according to pt. 5.5.2.1 on downpipe 3 m

Nominal width	EN 1253	5 mm	15 mm	25 mm	35 mm	45 mm	55 mm	65 mm	75 mm
DN 50	min. 0,9 (35 mm)	0,35	1,50	3,15	5,40	-	-	-	-
DN 75	min. 1,7 (35 mm)	0,30	1,30	1,50	1,55	1,60	1,65	1,70	1,80
DN 110	min. 4,5 (35 mm)	0,30	1,25	1,35	1,40	1,50	1,55	1,60	1,65

Drainage capacity measured according to EN 1253-2:2015 according to clause 5.5.1.2 free draining

Nominal width	EN 1253	5 mm	15 mm	20 mm	35 mm	45 mm	55 mm	65 mm	75 mm
DN 50	min. 0,8 (20 mm)	0,50	1,60	1,70	1,80	1,85	1,90	1,95	-
DN 75	min. 0,8 (20 mm)	0,40	1,25	1,30	1,40	1,45	1,50	1,55	1,60
DN 110	min. 1,4 (20 mm)	0,35	1,20	1,30	1,40	1,45	1,50	1,55	1,60

HL5100T Balcony and terrace drain, horizontal, with frost-proof flap; high capacity

Data

Material	PP
Outlet	DN75, horizontal, pluggable
Frame	145 x 145mm, stainless steel, cuttable in height
Grate	Stainless steel 138 x 138
Stench trap	Frost-proof flap
Standard	EN 1253
Load classification	K 3 - max. 300 kg
Additional information	For surfaces up to 51 m²; Recess dimensions: min. 220 x 340 mm
Including	Supporting frame, lid cover

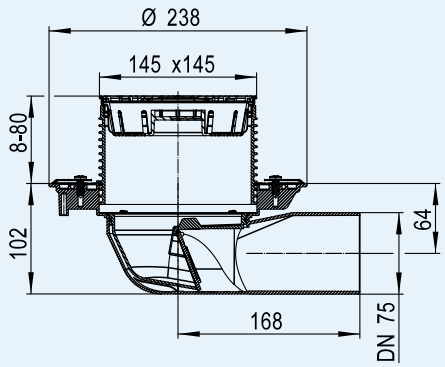

HL-No. 5100T	Dimension DN75	Weight 904 g	EAN +034703	Piece/package 1

HL5100TH Balcony and terrace drain like HL5100T, but with bitumen flange

Data

Material	PP, pre-welded bitumen flange
Outlet	DN75, horizontal, pluggable
Frame	145 x 145mm, stainless steel, cuttable in height
Grate	Stainless steel 138 x 138
Stench trap	Frost-proof flap
Standard	EN 1253
Load classification	K 3 - max. 300 kg
Additional information	For bitumen surfaces up to 51 m²; Recess dimensions: min. 220 x 340 mm
Including	Supporting frame, lid cover

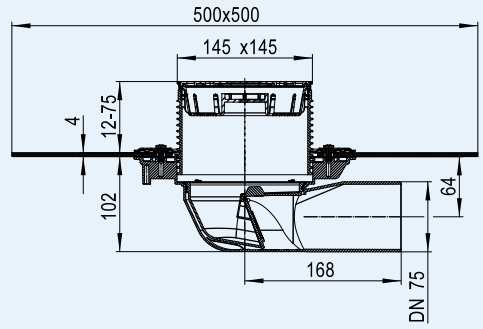

HL-No. 5100TH	Dimension DN75	Weight 2266 g	EAN +034710	Piece/package 1

Drainage table HL5100T, HL5100TH
Tested according to EN 1253-2:2015 according to pt. 5.5.2.1 Fig. 10a) + 10b) and pt. 5.5.1.2 Fig. 9
Drainage capacity tested according to EN 1253-2:2015 according to pt. 5.5.2.1 on downpipe 3 m

Nominal width	EN 1253	5 mm	15 mm	25 mm	35 mm	45 mm	55 mm	65 mm	75 mm
DN 75	min. 1,7 (35 mm)	0,45	1,50	2,85	2,90	2,95	3,40	4,40	4,45

Drainage capacity measured according to EN 1253-2:2015 according to clause 5.5.1.2 free draining

Nominal width	EN 1253	5 mm	15 mm	20 mm	35 mm	45 mm	55 mm	65 mm	75 mm
DN 75	min. 0,8 (20 mm)	0,50	1,80	2,05	2,25	2,30	2,50	2,60	2,65

HL5100TG Drain horizontal with cast iron frame and grate, with frost-proof flap

Data

Material	PP/Cast iron
Outlet	DN75, horizontal, pluggable
Extension	Cast iron frame 190 x 190mm, cuttable in height 45-80mm
Inlet	Cast iron grate 175 x 175 mm
Stench trap	Frost-proof flap
Standard	EN 1253
Load classification	B - 12,5 t
Additional information	especially suitable for parking garages, storerooms, garbage rooms and floor areas made of mastic asphalt, for outdoor areas up to 62 m² with a rainfall rate of 400 l/ (s x ha), Recess dimensions: min. 220 x 340 mm
Including	Lid cover

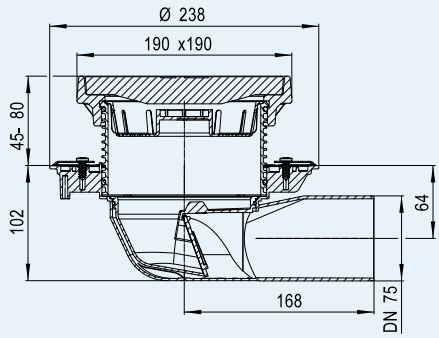

HL-No. 5100TG	Dimension DN75	Weight 12355 g	EAN +048809	Piece/package 1

HL5100THG Drain like HL5100TG, but with bitumen flange

Data

Material	PP/Cast iron, pre-welded bitumen flange
Outlet	DN75, horizontal, pluggable
Extension	Cast iron frame 190 x 190mm, cuttable in height 45-80mm
Inlet	Cast iron grate 175 x 175 mm
Stench trap	Frost-proof flap
Standard	EN 1253
Load classification	B - 12,5 t
Additional information	especially suitable for parking garages, storerooms, garbage rooms and floor areas made of mastic asphalt, for outdoor areas up to 62 m² with a rainfall rate of 400 l/ (s x ha), recess dimensions: min. 220 x 340 mm
Including	Lid cover

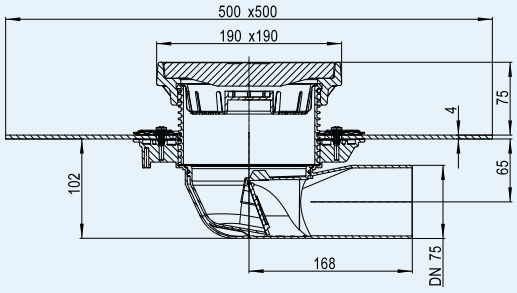

HL-No. 5100THG	Dimension DN75	Weight 13715 g	EAN +048816	Piece/package 1

Drainage table HL5100TG, HL5100THG
Tested according to EN 1253-2:2015 according to pt. 5.5.2.1 Fig. 10a) + 10b) and pt. 5.5.1.2 Fig. 9
Drainage capacity tested according to EN 1253-2:2015 according to pt. 5.5.2.1 on downpipe 3 m

Nominal width	EN 1253	5 mm	15 mm	25 mm	35 mm	45 mm	55 mm	65 mm	75 mm
DN 75	min. 1,7 (35 mm)	0,55	1,90	3,00	3,30	3,70	3,80	3,90	4,00

Drainage capacity measured according to EN 1253-2:2015 according to clause 5.5.1.2 free draining

Nominal width	EN 1253	5 mm	15 mm	20 mm	35 mm	45 mm	55 mm	65 mm	75 mm
DN 75	min. 0,8 (20 mm)	0,75	1,85	2,50	2,85	2,95	3,10	3,20	3,25

HL3100T Balcony and terrace drain, vertical, with frost-proof flap; high capacity

Data

Material	PP
Connection dimension	DN75/110, vertical, pluggable
Frame	145 x 145mm, stainless steel, cuttable in height
Grate	Stainless steel 138 x 138
Stench trap	Frost-proof flap
Standard	EN 1253
Load classification	K 3 - max. 300 kg
Additional information	for outdoor areas up to 45 m² (DN110) or up to 55 m² (DN75) at a rainfall rate of of 400 l/(s x ha), Recess dimensions: min. 220 x 220 mm, Core hole dimension: Ø 220 mm
Including	Supporting frame, lid cover

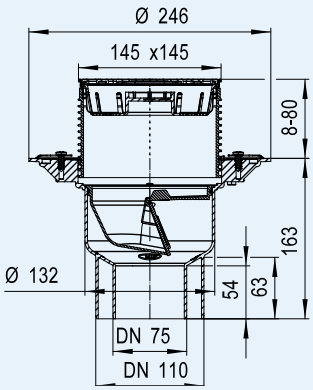

HL-No. 3100T	Dimension DN75/110	Weight 954 g	EAN +034659	Piece/package 1

HL3100TH Balcony and terrace drain like HL3100T, but with bitumen flange

Data

Material	PP, pre-welded bitumen flange
Connection dimension	DN75/110, vertical, pluggable
Frame	145 x 145mm, stainless steel, cuttable in height
Grate	Stainless steel 138 x 138
Stench trap	Frost-proof flap
Standard	EN 1253
Load classification	K 3 - max. 300 kg
Additional information	for outdoor areas up to 45 m² (DN110) or up to 55 m² (DN75) at a rainfall rate of of 400 l/(s x ha), for bituminous waterproofing, Recess dimensions: min. 220 x 220 mm, Core hole dimension: Ø 220 mm
Including	Supporting frame, lid cover

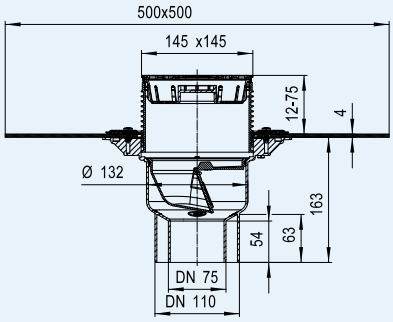

HL-No. 3100TH	Dimension DN75/110	Weight 2290 g	EAN +034666	Piece/package 1

Drainage table HL3100T, HL3100TH
Tested according to EN 1253-2:2015 according to pt. 5.5.2.1 Fig. 10a) + 10b) and pt. 5.5.1.2 Fig. 9
Drainage capacity tested according to EN 1253-2:2015 according to pt. 5.5.2.1 on downpipe 3 m

Nominal width	EN 1253	5 mm	15 mm	25 mm	35 mm	45 mm	55 mm	65 mm	75 mm
DN 75	min. 1,7 (35 mm)	0,45	1,80	2,70	2,75	2,8	2,85	2,90	2,95
DN110	min. 4,5 (35 mm)	0,40	1,40	1,75	1,80	1,90	1,95	2,00	2,05

Drainage capacity measured according to EN 1253-2:2015 according to clause 5.5.1.2 free draining

Nominal width	EN 1253	5 mm	15 mm	20 mm	35 mm	45 mm	55 mm	65 mm	75 mm
DN 75	min. 0,8 (20 mm)	0,70	1,65	2,20	2,30	2,35	2,40	2,45	2,50
DN110	min. 1,4 (20 mm)	0,70	1,65	1,80	1,95	2,00	2,05	2,10	2,20

HL3100TG Drain vertical with cast iron frame and grate, with frost-proof flap

Data

Material	PP/Cast iron
Outlet	DN75/110, vertical, pluggable
Extension	Cast iron frame 190 x 190mm, cuttable in height 45-80mm
Inlet	Cast iron grate 175 x 175 mm
Stench trap	Frost-proof flap
Standard	EN 1253
Load classification	B - 12,5 t
Additional information	especially suitable for parking garages, storage or garbage rooms and floor areas made of mastic asphalt, for outdoor areas up to 48 m² (DN110) or up to 61 m² (DN75) with a rainfall rate of rainfall rate of 400 l/(s x ha), Recess dimensions: min. 220 x 220 mm, Core hole dimension: Ø 220 mm
Including	Lid cover

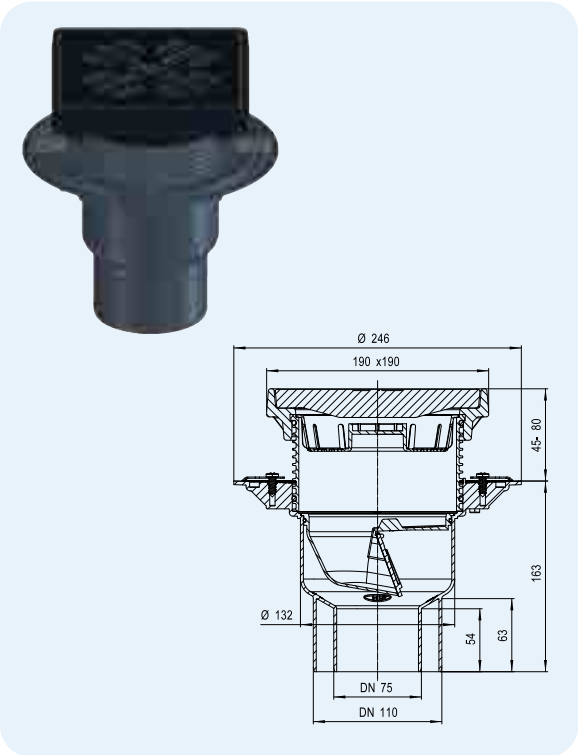

HL-No.	Dimension	Weight	EAN	Piece/package
3100TG	DN75/110	12405 g	+048755	1

HL3100THG Drain like HL3100TG, but with bitumen flange

Data

Material	PP/Cast iron, pre-welded bitumen flange
Outlet	DN75/110, vertical, pluggable
Extension	Cast iron frame 190 x 190mm, cuttable in height 45-80mm
Inlet	Cast iron grate 175 x 175 mm
Stench trap	Frost-proof flap
Standard	EN 1253
Load classification	B - 12,5 t
Additional information	especially suitable for parking garages, storage or garbage rooms and floor areas made of mastic asphalt, for outdoor areas up to 48 m² (DN110) or up to 61 m² (DN75) with a rainfall rate of 400 l/(s x ha), Recess dimensions: min. 220 x 220 mm, Core hole dimension: Ø 220 mm
Including	Lid cover

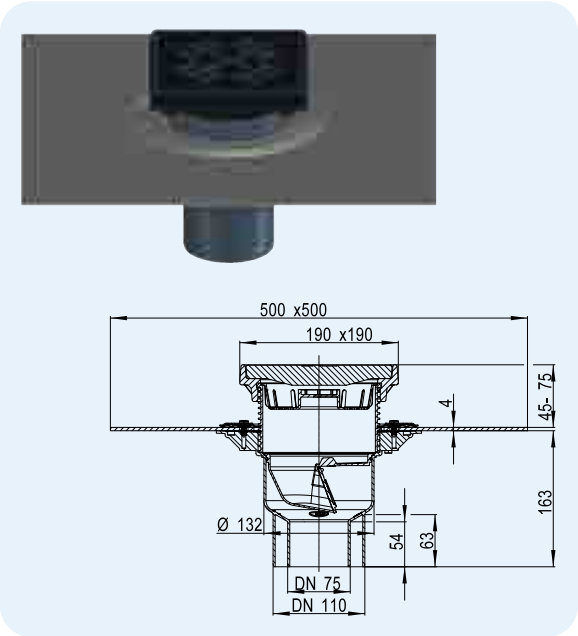

HL-No.	Dimension	Weight	EAN	Piece/package
3100THG	DN75/110	13740 g	+048762	1

Drainage table HL3100TG, HL3100THG
Tested according to EN 1253-2:2015 according to pt. 5.5.2.1 Fig. 10a) + 10b) and pt. 5.5.1.2 Fig. 9
Drainage capacity tested according to EN 1253-2:2015 according to pt. 5.5.2.1 on downpipe 3 m

Nominal width	EN 1253	5 mm	15 mm	25 mm	35 mm	45 mm	55 mm	65 mm	75 mm
DN 75	min. 1,7 (35 mm)	0,45	1,35	2,90	3,00	3,10	3,15	3,20	3,30
DN110	min. 4,5 (35 mm)	0,55	1,90	2,10	2,20	2,30	2,35	2,40	2,50

Drainage capacity measured according to EN 1253-2:2015 according to clause 5.5.1.2 free draining

Nominal width	EN 1253	5 mm	15 mm	20 mm	35 mm	45 mm	55 mm	65 mm	75 mm
DN 75	min. 0,8 (20 mm)	0,55	1,65	2,45	2,80	2,85	2,90	2,95	3,00
DN110	min. 1,4 (20 mm)	0,40	1,30	1,95	2,15	2,20	2,25	2,30	2,40

HL Balcony and terrace drains – Accessories – Data

HL080.8E Leaf catcher

Data

Material	PP
Additional information	For non-walkable roofs. Fits to drains HL80-series, HL90 and HL310N.2

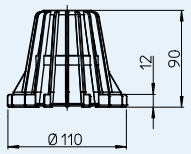

HL-No.	Dimension	Weight	EAN	Piece/package
080.8E	Ø 110 mm	42 g	+008087	1

HL157 Leaf catcher suitable for HL3100T and HL5100T series drains

Data

Material	PP
Additional information	For non-walkable roofs. Fits to drains HL5100T and HL3100T

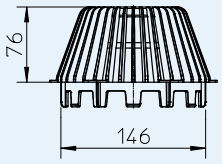

HL-No.	Dimension	Weight	EAN	Piece/package
157	Ø 146 mm	110 g	+603824	1

HL150 Drainage element for drains HL3100T-series and HL5100T-series

Data

Material	PP
Additional information	For drainage of rain water on the waterproofing level, e.g. inverted construction

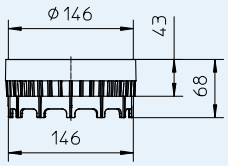

HL-No.	Dimension	Weight	EAN	Piece/package
150	Ø 146 mm	72 g	+034550	1

HL151 Gravel guard for drains HL3100T-series and HL5100T-series

Data

Material	PP
Additional information	Flat gravel guard below slaps or wooden panels on terraces

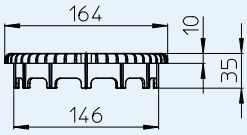

HL-No.	Dimension	Weight	EAN	Piece/package
151	Ø 146 mm	88 g	+034567	1

HL152 Thermal insulation suitable for HL5100T drain series

Data

Material	EPS
Additional information	To be set on the drain body of HL5100T and to be fixed with 2 screws

HL-No.	Dimension	Weight	EAN	Piece/package
152		220 g	+034574	1

HL153 Thermal insulation suitable for HL3100T drain series

Data

Material	EPS
Additional information	To be set on the drain body of HL3100T and to be fixed with 2 screws

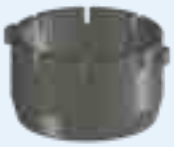

HL-No.	Dimension	Weight	EAN	Piece/package
153		162 g	+034581	1

HL155 Thermal insulation with integrated heating suitable for HL5100T drain series

Data

Material	EPS
Additional information	The thermo-insulation is fixed on the drain body 5100T by screws. The heating cable is self-regulating with 40W/M, 230V (appr. 12 - 14W cable). Overheating is impossible due to the characteristic of the cable.

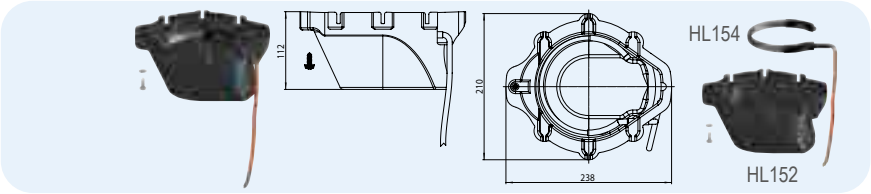

HL-No.	Dimension	Weight	EAN	Piece/package
155		324 g	+034649	1

HL156 Thermal insulation with integrated heating suitable for HL3100T drain series

Data

Material	EPS
Additional information	The thermo-insulation is fixed on the drain body 3100T by screws. The heating cable is self-regulating with 40W/M, 230V (appr. 12 - 14W cable). Overheating is impossible due to the characteristic of the cable.

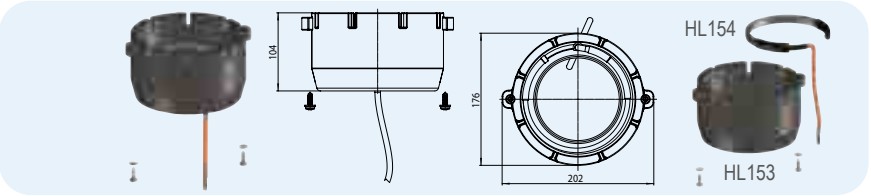

HL-No.	Dimension	Weight	EAN	Piece/package
156		268 g	+035656	1

HL180 Drainage element for drains HL80-series, HL90 and HL310N.2

Data

Material	PP
Additional information	For drainage of rain water on the waterproofing level, e.g. inverted construction

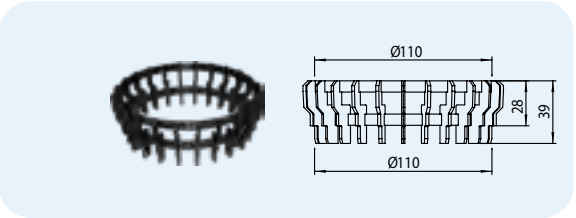

HL-No.	Dimension	Weight	EAN	Piece/package
180	Ø 110 mm	19 g	+003938	1

HL181 Gravel guard for drains HL80-series, HL90 and HL310N.2

Data

Material	PP
Additional information	flat gravel trap for the installation below slaps or duckboards on terraces

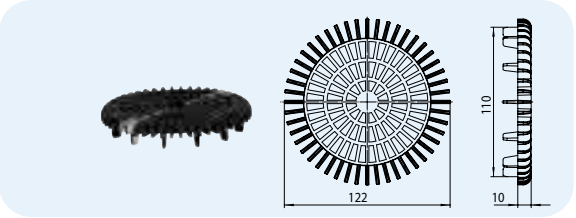

HL-No.	Dimension	Weight	EAN	Piece/package
181	DN110	44 g	+028993	1

HL82 Heating kit

Data

Additional information	Self-adjusting heating set 18W / 230V. The set is equiped with a tripolar heat conductive ribbon, 1m long, insulation tape and lace. Overheating is impossible, because of the self-adjusting character of the heating. For HL80-series and HL310N.2

HL-No.	Dimension	Weight	EAN	Piece/package
82		430 g	+010820	1

HL619 Fixing brackets „FixIt"

Data

Material	Stainless steel
Additional information	For a tight connection between drain and extension. Fits for all balcony- and terrace drains of HL

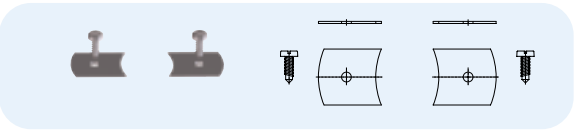

HL-No.	Dimension	Weight	EAN	Piece/package
619		54 g	+013197	1

HL Attica drains

Basic information about design and installation

Ist die Ableitung des Regenwassers durch das Flachdach mit herkömmlichen Dachabläufen nicht möglich oder sinnvoll, so bieten sich Attikaabläufe vor allem für kleine Dachflächen, wie Balkone, Terrassen und Loggien an.

Durch die Ableitung des Regenwassers außerhalb der Gebäudehülle ergeben sich vor allem im Wohnbau gewisse Vorteile:
- Keine Schwächung der Wärmedämmung, keine Kältebrücke
- Keine Geräuschbelästigung innerhalb des Gebäudes (Regenfallrohr befindet sich außerhalb des Gebäudes).
- Platzsparend: Keine Rohrführung innerhalb des Gebäudes oder unterhalb der Decke
- Keine Deckendurchdringung, daher keine statische Schwächung der Decke
- Kostengünstige Variante, weniger Material, weniger Arbeitszeit

Ablaufleistung
Im Vergleich zu herkömmlichen Dachabläufen haben Attikaabläufe eine wesentlich geringere Ablaufleistung, da hier nicht die volle Wassereinlauffläche genutzt werden kann.

Bei Warmdachkonstruktionen kann eine um mehr als die 3-fache Ablaufleistung als üblich mit Attikaabläufen, durch Situierung des Ablaufgehäuses auf Ebene der Dampfsperre, einfach erreicht werden. Dabei wird der Attikaablauf in die Dampfsperre eingebunden und mit den dafür vorgesehenen Zubehörteilen wie Einlaufelement HL164 und Aufstockelement HL85N(H) auf Abdichtebene verlängert und angeschlossen werden.
Die daraus resultierende Wasserstauhöhe (Druckhöhe) ermöglicht hohe Ablaufleistungen auch mit Attikaabläufen. Ein weiterer Vorteil bei dieser Art von Planung und Montage ist die temporäre Entwässerungsmöglichkeit der Dampfsperre während der Bauphase, um die den Eintrag von Nässe und Feuchte ins Gebäude zu verhindern.

Die hydraulische Ablauftabelle mit verschiedenen Einbausituationen finden Sie unter www.hl.at

Die HL Attikaablauf-Serie HL68 besteht aus 3 verschiedenen Grundelementen (Tabletts) und einer Vielzahl an Zubehörteilen, mit denen jede Art des Dachaufbaus bis hin zum Umkehrdach verwirklicht werden kann. Im Folgenden finden Sie eine Auswahl der häufigsten Konstruktionsbeispiele.

Relevant standards/directives

ÖNORM B2501.....Drainage of buildings
DIN 1986-100.....Drainage systems of buildings and estates
EN 12056.....Gravity drainage systems inside of buildings
ÖNORM B2209.....Waterproofing works
ÖNORM B2220.....Roof waterproofings with bitumen and plastic sheetings
ÖNORM B7209.....Waterproofings for buildings
ÖNORM B7220.....Roofs with waterproofings

Terrace with slabs in gravel embankment, without thermal insulation

Warm roof with slabs in gravel embankment

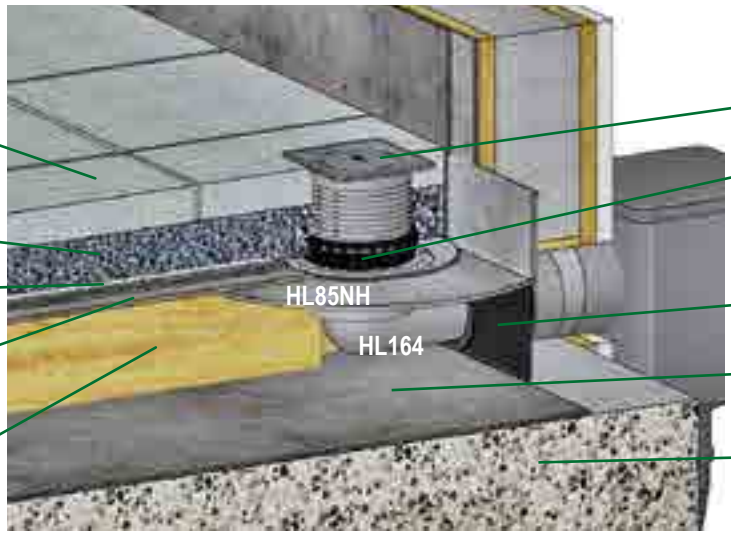

Warm roof with liquid waterproofing

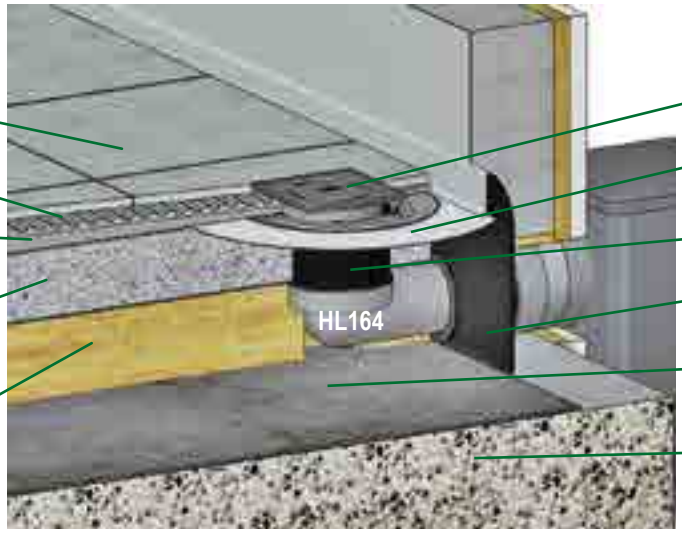

Converted roof construction

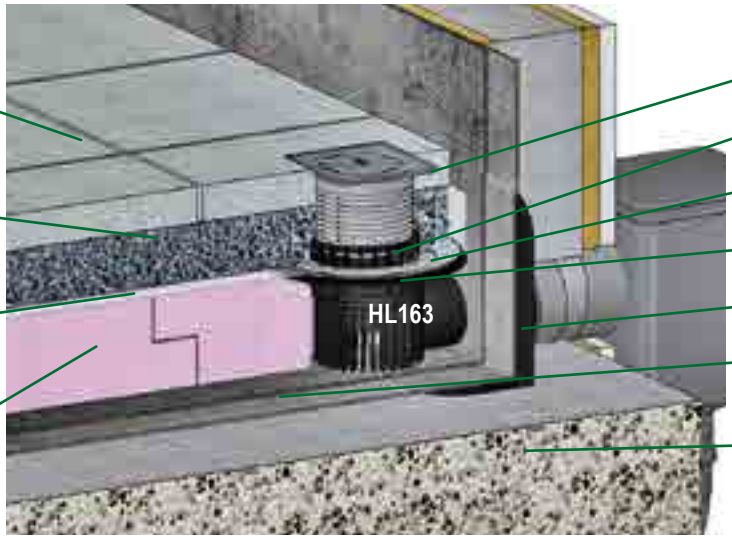

HL attica drains - Installation HL68H.0

Kombinace střešní vtok s bočním odtokem DN75 s atikovým odtokem

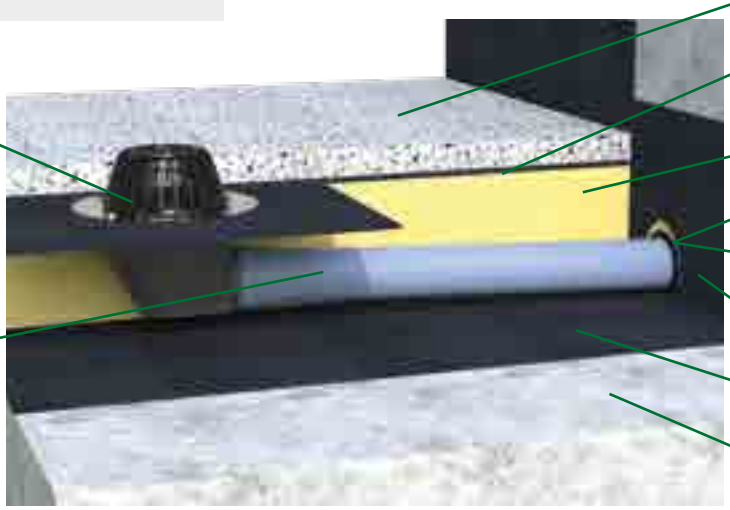

Kombinace střešní vtok s bočním odtokem DN75 s atikovým odtokem

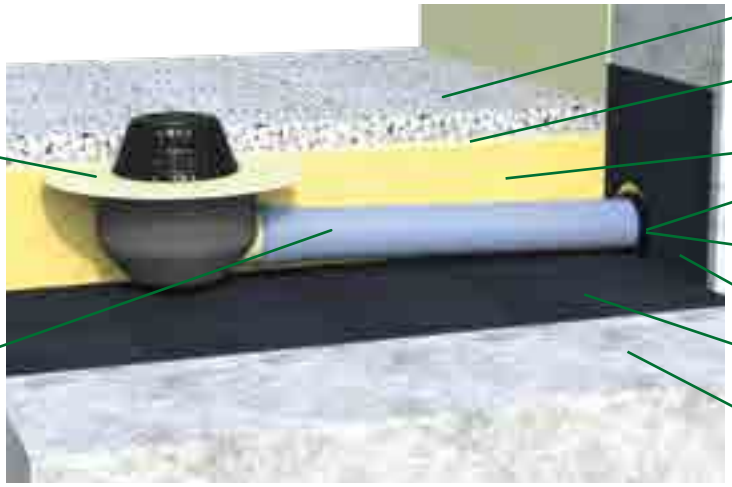

Kombinace terasový vtok s bočním odtokem DN75 s atikovým odtokem

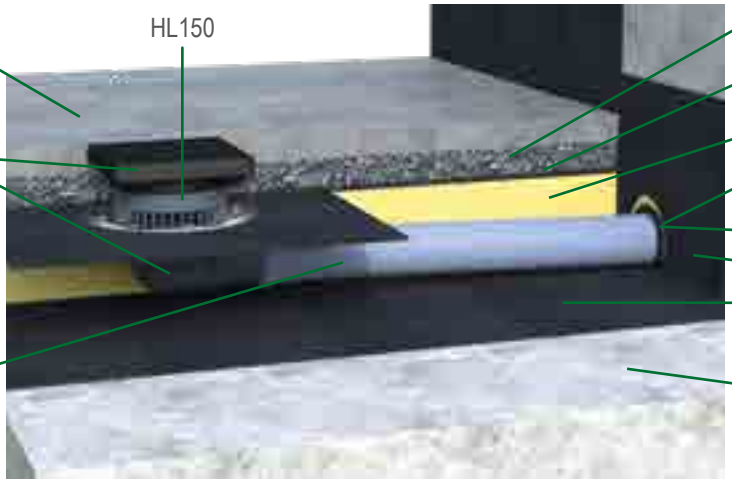

HL Attica drains - Products - Data

HL68H.0 Attica drain with bitumen membrane and PP-wastepipe

Data

Capacity	HL68H.0/50: 0,48 l/s HL68H.0/75: 0,61 l/s HL68H.0/110: 0,71 l/s free outlet pipe and 35mm backwater height; for further information please see www.hl.at
Material	PP, bitumen
Outlet	horizontal with 2,5° incline HL68H.0/50: DN50 HL68H.0/75: DN75 HL68H.0/110: DN110
Waterproofing	with pre-welded bitumen membrane
Recommended for	bitumen waterproofings
Additional information	Notch dimension 150 x 150 mm / Ø 150 mm

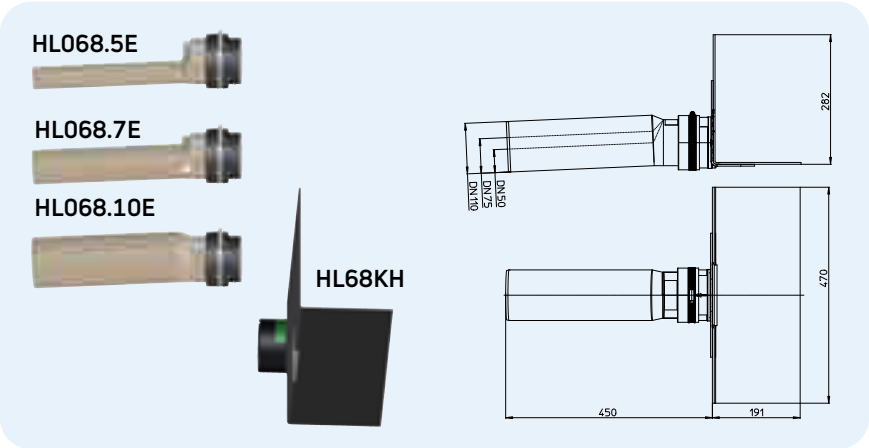

HL-No.	Dimension	Weight	EAN	Piece/package
68H.0/50	DN50	1662 g	+047529	1
68H.0/75	DN75	1748 g	+047536	1
68H.0/110	DN110	1882 g	+047512	1

HL68F.0 Attica drain with PP-flange and PP-wastepipe

Data

Capacity	HL68F.0/50: 0,48 l/s HL68F.0/75: 0,61 l/s HL68F.0/110: 0,71 l/s free outlet pipe and 35mm backwater height; for further information please see www.hl.at
Material	PP
Outlet	horizontal with 2,5° incline HL68F.0/50: DN50 HL68F.0/75: DN75 HL68F.0/110: DN110
Waterproofing	PP, weldable with hot air
Recommended for	FPO waterproofings, based on PP
Additional information	Notch dimension 150 x 150 mm / Ø 150 mm

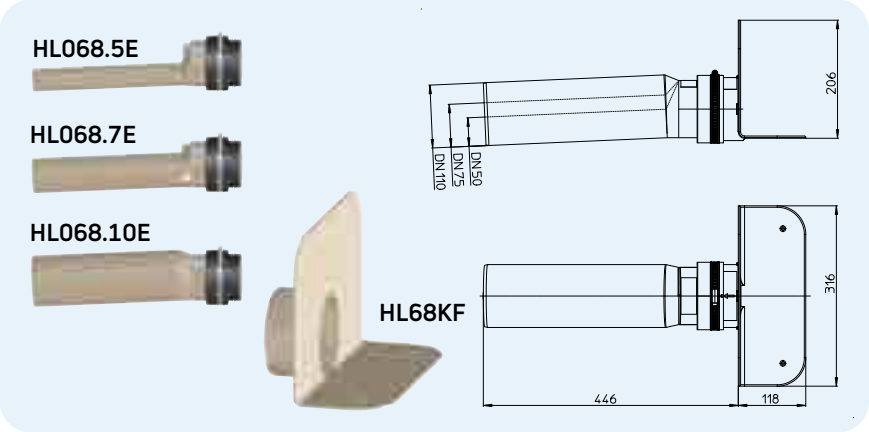

HL-No.	Dimension	Weight	EAN	Piece/package
68F.0/50	DN50	830 g	+047499	1
68F.0/75	DN75	916 g	+047505	1
68F.0/110	DN110	1050 g	+047482	1

HL68P.0 Attica drain with PVC flange and PP-wastepipe

Data

Capacity	HL68P.0/50: 0,48 l/s HL68P.0/75: 0,61 l/s HL68P.0/110: 0,71 l/s free outlet pipe and 35mm backwater height; for further information please see www.hl.at
Material	PVC, PP
Outlet	horizontal with 2,5° incline HL68P.0/50: DN50 HL68P.0/75: DN75 HL68P.0/110: DN110
Waterproofing	PVC, weldable with hot air
Recommended for	PVC waterproofings
Additional information	Notch dimension 150 x 150 mm / Ø 150 mm

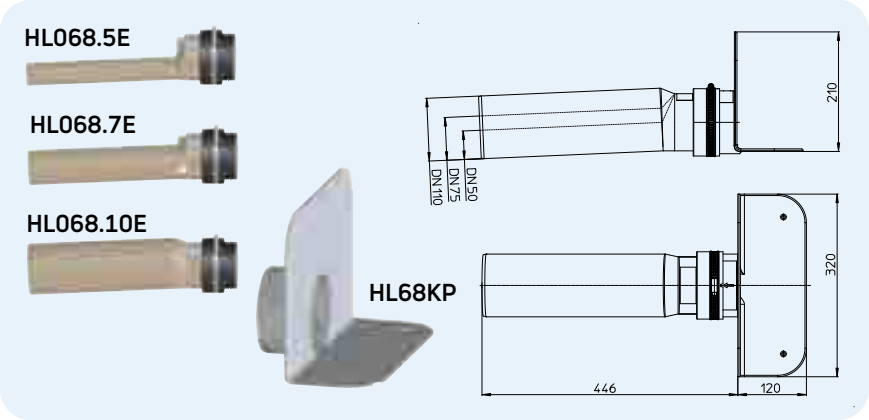

HL-No.	Dimension	Weight	EAN	Piece/package
68P.0/50	DN50	1090 g	+047598	1
68P.0/75	DN75	1176 g	+047504	1
68P.0/110	DN110	1320 g	+047581	1

Drainage capacities of HL Attica drains in combination with different attachments

Tested according to EN1253-2 : 2015 according to 5.5.3.1 Fig. 11a)

Figure 1

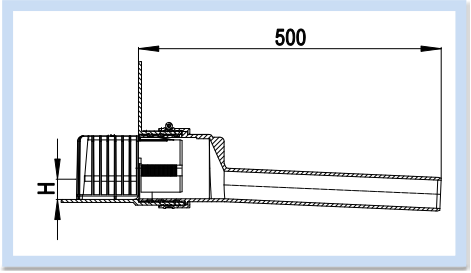

Attica drain HL68H.0/DN, HL68P.0/DN, HL68F.0/DN with leaf catcher HL068.1E or leaf catcher for emergency drainage HL068.1Safe

Figure 2

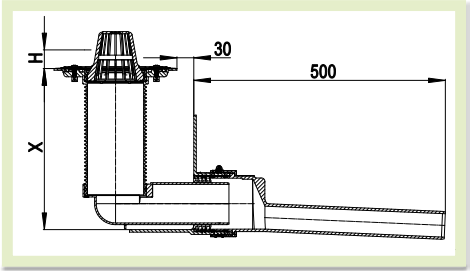

Attica drain HL68H.0/DN, HL68P.0/DN, HL68F.0/DN with inlet element HL164, extension element with sealing flange HL85N(H) and leaf catcher HL080.8E

Figure 3

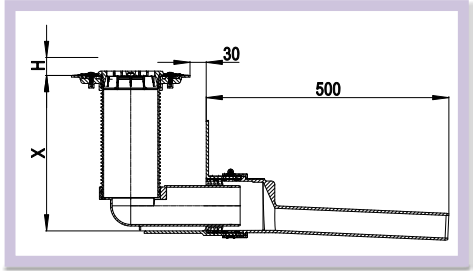

Attica drain HL68H.0/DN, HL68P.0/DN, HL68F.0/DN with inlet element HL164, extension element with sealing flange HL85N(H) and gravel catcher HL181

Figure 4

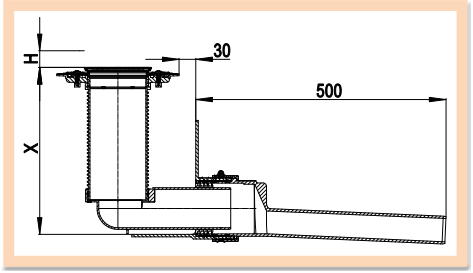

Attica drain HL68H.0/DN, HL68P.0/DN, HL68F.0/DN with inlet element HL164, extension element with sealing flange HL85N(H) and grating

Tablett mit Anschlussrohr DN 50

		H Höhe l/s ab Flansch											
		5 mm	15 mm	25 mm	**35 mm**	45 mm	55 mm	65 mm	70mm	75mm	80 mm	90 mm	100 mm
Bild 1	mit **Laubfangkorb,** gemessen über Flansch	/	/	0,22	**0,48**	0,74	1,07	1,46	1,61	1,72	1,81	1,96	2
	mit **Notentwässerung-Laubfangkorb,** gemessen ab 35 mm über Flansch	/	0,33	0,57	**0,89**	1,06	1,14	1,22	1,28	1,31	1,35	1,44	1,52
Bild 2	X = 110 mm mit Wärmedämmung 110mm hoch	–	–	–	**1,78**	–	–	–	–	2	–	–	2,3
	X = 150 mm mit Wärmedämmung 150mm hoch	–	–	–	**2,13**	–	–	–	–	2	–	–	2,3
	X = 200 mm mit Wärmedämmung 200mm hoch	–	–	–	**2,25**	–	–	–	–	2,48	–	–	2,58
Bild 3	X = 110 mm mit Wärmedämmung 110mm hoch	–	–	–	**1,8**	–	–	–	–	2,08	–	–	2,18
	X = 150 mm mit Wärmedämmung 150mm hoch	–	–	–	**1,96**	–	–	–	–	2,08	–	–	2,18
	X = 200 mm mit Wärmedämmung 200mm hoch	–	–	–	**2,16**	–	–	–	–	2,43	–	–	2,52
Bild 4	X = 110 mm mit Wärmedämmung 110mm hoch	–	–	–	**1,31**	–	–	–	–	1,76	–	–	1,89
	X = 150 mm mit Wärmedämmung 150mm hoch	–	–	–	**1,39**	–	–	–	–	1,76	–	–	1,89
	X= 200 mm mit Wärmedämmung 200mm hoch	–	–	–	**1,44**	–	–	–	–	2,2	–	–	2,26

Tablett mit Anschlussrohr DN 75

		Hydraulik l/s ab Flansch											
		5 mm l/s	15 mm l/s	25 mm l/s	**35 mm l/s**	45 mm l/s	55 mm l/s	65 mm l/s	70 mm l/s	75 mm l/s	80 mm l/s	90 mm l/s	100 mm l/s
Bild 1	mit **Laubfangkorb** gemessen über Flansch	/	/	0,34	**0,61**	0,88	1,16	1,61	1,78	2	2,31	2,81	3,12
	mit **Notentwässerung-Laubfangkorb**, gemessen ab 35 mm über Flansch	/	0,33	0,57	**0,88**	1,2	1,38	1,46	1,61	1,72	1,81	1,93	2,1
Bild 2	X = 110 mm mit Wärmedämmung 110mm hoch	–	–	–	**2,43**	–	–	–	–	2,43	–	–	3,11
	X = 150 mm mit Wärmedämmung 150mm hoch	–	–	–	**2,66**	–	–	–	–	2,66	–	–	3,11
	X = 200 mm mit Wärmedämmung 200mm hoch	–	–	–	**3,13**	–	–	–	–	3,13	–	–	3,67
Bild 3	X = 110 mm mit Wärmedämmung 110mm hoch	–	–	–	**2,32**	–	–	–	–	2,32	–	–	3,02
	X = 150 mm mit Wärmedämmung 150mm hoch	–	–	–	**2,61**	–	–	–	–	2,61	–	–	3,02
	X = 200 mm mit Wärmedämmung 200mm hoch	–	–	–	**2,96**	–	–	–	–	2,96	–	–	3,47
Bild 4	X = 110 mm mit Wärmedämmung 110mm hoch	–	–	–	**1,41**	–	–	–	–	1,41	–	–	2,26
	X = 150 mm mit Wärmedämmung 150mm hoch	–	–	–	**1,77**	–	–	–	–	1,77	–	–	2,26
	X= 200 mm mit Wärmedämmung 200mm hoch	–	–	–	**2,39**	–	–	–	–	2,39	–	–	2,84

Tablett mit Anschlussrohr DN 110

		Hydraulik l/s ab Flansch											
		5 mm l/s	15 mm l/s	25 mm l/s	**35 mm l/s**	45 mm l/s	55 mm l/s	65 mm l/s	70mm l/s	75mm l/s	80 mm l/s	90 mm l/s	100 mm l/s
Bild 1	mit **Laubfangkorb** gemessen über Flansch	/	0,22	0,42	**0,71**	1,05	1,38	1,8	1,98	2,2	2,48	2,9	3,28
	mit **Notentwässerung-Laubfangkorb**, gemessen ab 35 mm über Flansch	/	0,32	0,55	**0,83**	1,1	1,30	1,48	1,59	1,65	1,76	1,92	2,03
Bild 2	X = 110 mm mit Wärmedämmung 110mm hoch	–	–	–	**2,4**	–	–	–	–	2,72	–	–	3,03
	X = 150 mm mit Wärmedämmung 150mm hoch	–	–	–	**2,72**	–	–	–	–	2,72	–	–	3,03
	X = 200 mm mit Wärmedämmung 200mm hoch	–	–	–	**3,11**	–	–	–	–	3,55	–	–	3,66
Bild 3	X = 110 mm mit Wärmedämmung 110mm hoch	–	–	–	**2,3**	–	–	–	–	2,7	–	–	2,96
	X = 150 mm mit Wärmedämmung 150mm hoch	–	–	–	**2,65**	–	–	–	–	2,65	–	–	2,96
	X = 200 mm mit Wärmedämmung 200mm hoch	–	–	–	**2,96**	–	–	–	–	3,4	–	–	3,53
Bild 4	X = 110 mm mit Wärmedämmung 110mm hoch	–	–	–	**1,41**	–	–	–	–	2,02	–	–	2,23
	X = 150 mm mit Wärmedämmung 150mm hoch	–	–	–	**1,56**	–	–	–	–	1,56	–	–	2,23
	X= 200 mm mit Wärmedämmung 200mm hoch	–	–	–	**2,39**	–	–	–	–	2,7	–	–	2,82

HL Attica drains - Accessories - Data

HL068.1E Leaf catcher for attica drains series HL68

Data

Material	PP
Additional information	Fits to all attica drains 68-series

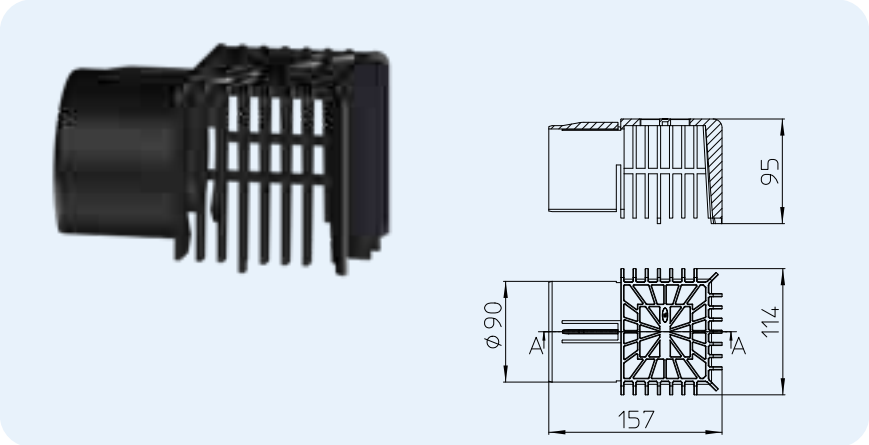

HL-No.	Dimension	Weight	EAN	Piece/package
068.1E		618 g	+047406	1

HL068.1Safe Leaf catcher „emergency drainage" for attica drains series HL68

Data

Material	PP
Additional information	With 35mm overflow edge for emergency drainage; Fits to all attica drains 68-series

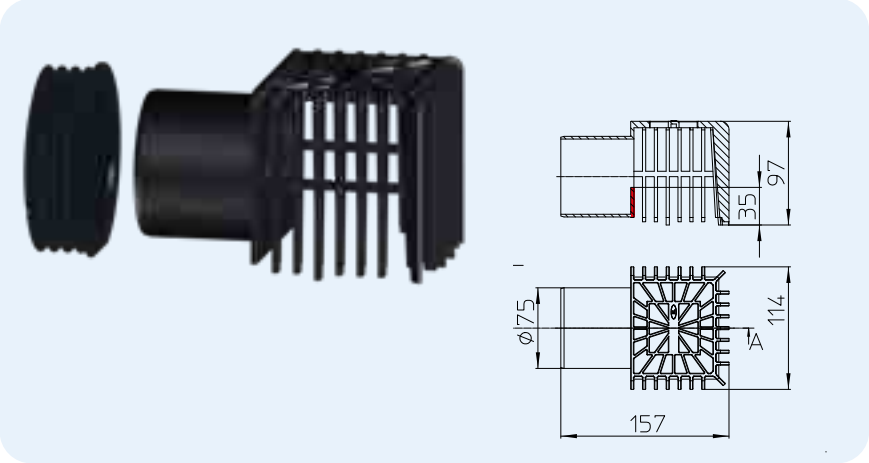

HL-No.	Dimension	Weight	EAN	Piece/package
068.1Safe		170 g	+047420	1

HL163 Drain element for attica drains series HL68

Data

Material	PP
Additional information	Fits to all attica drains 68-series; for drainage of converted roof constructions

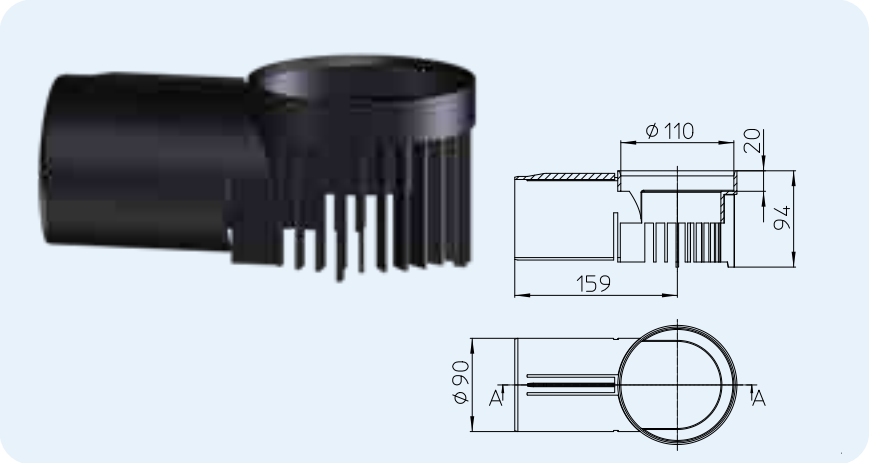

HL-No.	Dimension	Weight	EAN	Piece/package
163		152 g	+047376	1

HL163Safe Drain element „emergency drainage“ for attica drains series HL68

Data

Material	PP
Additional information	Fits to all attica drains 68-series; for emergency drainage of converted roofs constructions (with 35mm overflow edge)

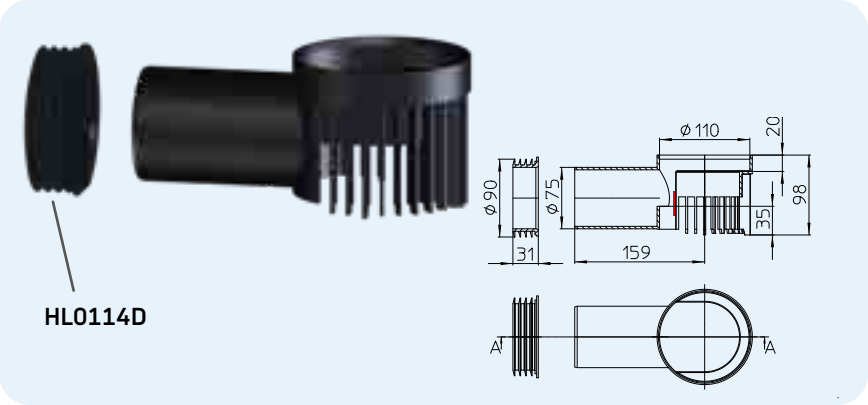

HL-No. 163Safe	Dimension	Weight 221 g	EAN +047383	Piece/package 1

HL164 Inlet element for attica drains series HL68

Data

Material	PP
Additional information	For warm roof constructions

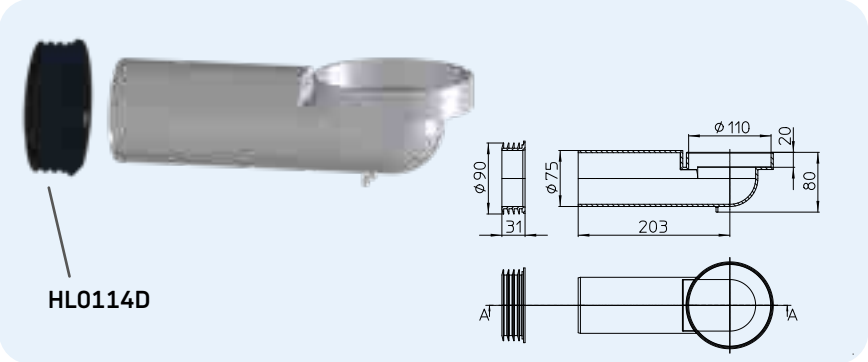

HL-No. 164	Dimension	Weight 226 g	EAN +047390	Piece/package 1

HL163.1 Drainage ring for HL164

Data

Material	PP
Additional information	Drainage ring for HL164

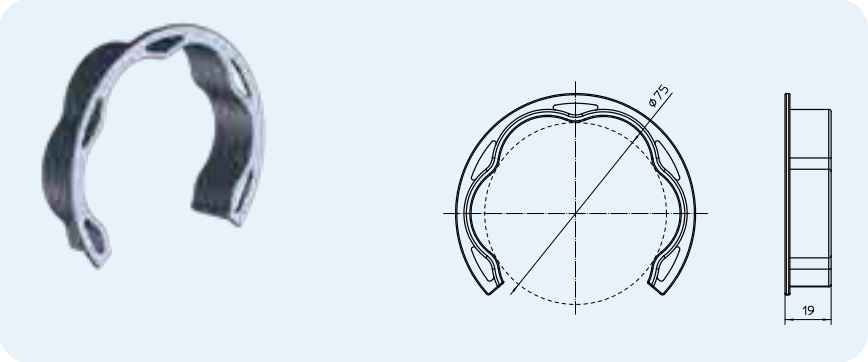

HL-No. 163.1	Dimension DN 75	Weight	EAN +605031	Piece/package 1